BC-ST Stainless steel submersible pumps TWO-CHANNEL

Sewage
Domestic use
Civil use
Industrial use

※ **Powerful and robust high-efficiency pumps made entirely of stainless steel**

※ **Constructed entirely from stainless steel, BC-ST submersible pumps offer superior corrosion and abrasion.**

PERFORMANCE RANGE

- Flow rate up to **850 l/min** (51 m³/h)
- Head up to **16 m**

INSTALLATION AND USE

BC-ST stainless steel submersible pumps are designed to drain dirty and **sewage water** in **domestic, civil, and industrial settings**. Featuring a **TWO-CHANNEL** impeller, they can efficiently pump liquids containing suspended solids up to 50 mm in diameter with short fibers and handle wastewater, sewage, surface water, and sludge-mixed water in residential properties.

※ The hydraulic configuration of the volute and **TWO-CHANNEL** impeller results from advanced fluid dynamics calculations, delivering superior performance and efficiency for notable energy savings.

※ The **TWO-CHANNEL** impeller provides excellent performance and high energy efficiency, generating increased pressure for pumping solids up to **50 mm** in diameter, making it the best choice for wastewater drainage.

INCLUDES

※ Power cable length **10 m**
※ Float switch (exclusive to single-phase models)

APPLICATION LIMITS

- Depth below water level up to **5 m** (with an appropriately sized power cable)
- Liquid temperature up to **+40 °C**
- Capable of processing suspended solids up to **Ø 50 mm**
- **Minimum immersion for continuous service:**
  - **290 mm for BC 10/50-ST**
  - **330 mm for BC 15/50-ST**
  - **360 mm for BC 20/50-ST**

AVAILABLE UPON REQUEST

※ AISI 316L stainless steel pump shaft
※ Different voltage or frequency

PATENTS - TRADE MARKS - MODELS

- Patent No. EP2313658
- Patent No. IT0001428923

CURVES AND PERFORMANCE DATA

60 Hz

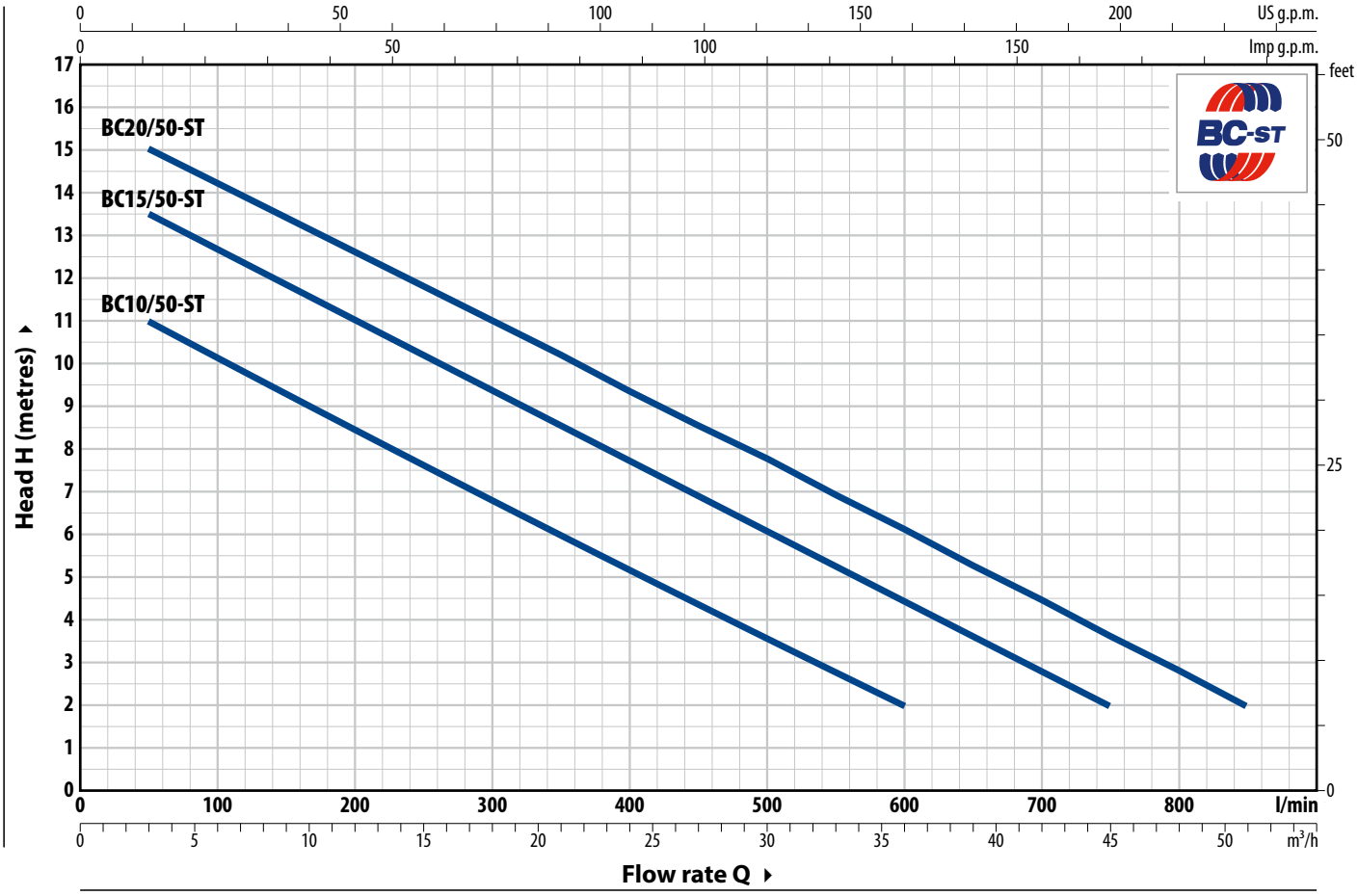

TYPE		POWER (P2)		Q m³/h	0	3	6	12	18	24	30	36	42	45	51
Single-phase	**Three-phase**	**kW**	**HP**	Q l/min	**0**	**50**	**100**	**200**	**300**	**400**	**500**	**600**	**700**	**750**	**850**
BCm 10/50-ST	**BC 10/50-ST**	0.75	1		12	11	10.3	8.6	6.9	5	3.6	2			
BCm 15/50-ST	**BC 15/50-ST**	1.1	1.5	**H** metres	14.5	13.5	12.8	11.2	9.5	7.8	6.1	4.5	2.8	2	
BCm 20/50-ST	**BC 20/50-ST**	1.5	2		16	15	14.4	12.8	11.1	9.5	7.9	6.2	4.5	3.7	2

Q = Flow rate **H** = Total manometric head

Performance curves comply with EN ISO 9906 Grade 3B tolerance limits.

ABSORPTION

TYPE	VOLTAGE	
Single-phase	**220 V**	**110 V**
BCm 10/50-ST	6.3 A	12.6 A
BCm 15/50-ST	8.0 A	-
BCm 20/50-ST	10.0 A	-

TYPE	VOLTAGE	
Three-phase	**380 V**	**440 V**
BC 10/50-ST	2.4 A	2.2 A
BC 15/50-ST	3.5 A	3.3 A
BC 20/50-ST	4.3 A	3.8 A

DIMENSIONS AND WEIGHT

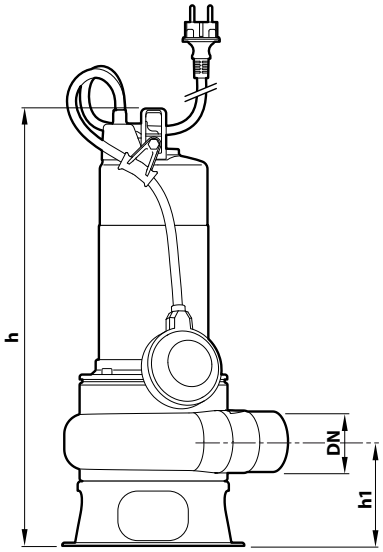

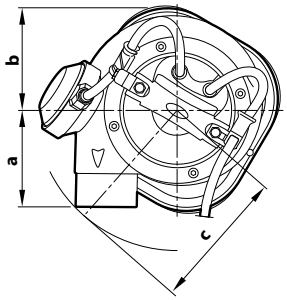

Typical installation

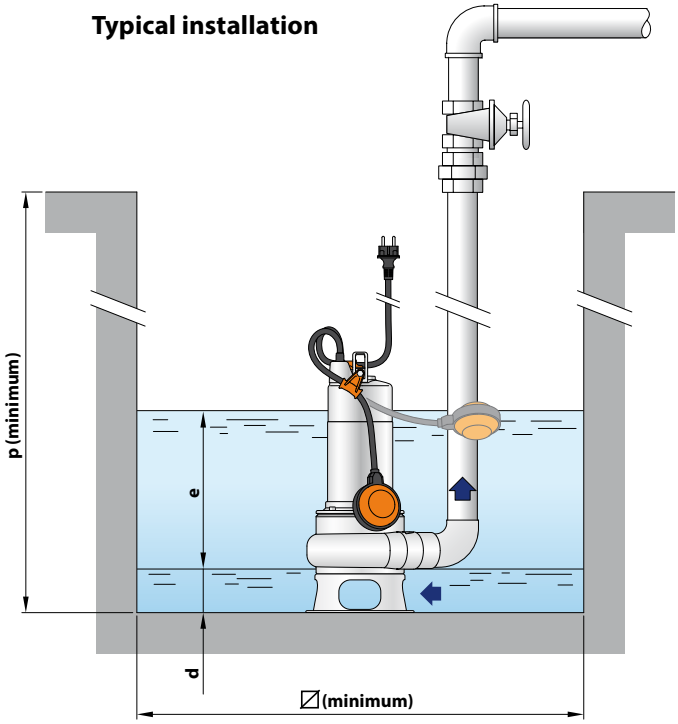

TYPE		PORT	Passage of	DIMENSIONS mm									kg	
Single-phase	Three-phase	DN	solid bodies	a	b	c	h	h1	d	e	p	⧄	1~	3~
BCm 10/50-ST	**BC 10/50-ST**						450						13.4	12.2
BCm 15/50-ST	**BC 15/50-ST**	**2"**	**Ø 50 mm**	102	95	145	483	107	60	adjustable	500	500	16.0	14.4
BCm 20/50-ST	**BC 20/50-ST**						513						18.2	16.0

PALLET CAPACITY

TYPE		GROUPAGE	CONTAINER
Single-phase	Three-phase	n. pumps	n. pumps
BCm 10/50-ST	**BC 10/50-ST**	45	60
BCm 15/50-ST	**BC 15/50-ST**	30	45
BCm 20/50-ST	**BC 20/50-ST**	30	45

MATERIALS AND COMPONENTS

1	**Pump body**	**AISI 304** stainless steel with ISO 228/1 threaded port
2	**Base**	Stainless steel **AISI 304**
3	**Impeller**	TWO-CHANNEL type in micro-cast **AISI 304** stainless steel.
4	**Motor sleeve**	Stainless steel **AISI 304**
5	**Motor cover**	**AISI 304** stainless steel for BC 10/50-ST Cast iron with cataphoresis treatment for BC 15/50-ST, BC 20/50-ST
6	**Motor shaft**	Stainless steel **AISI 431**

7 Double mechanical seal in oil chamber

Seal	Shaft	Location	Materials
MG1-14D SIC	Ø 14 mm	Motor side	Silicon carbide / Graphite / NBR
		Pump side	Silicon carbide/Silicon carbide/NBR

8 Capacitor
(exclusive to single-phase models)

9 Electric motor

BCm-ST: single-phase 220 V - 60 Hz or 110 V - 60 Hz with winding integrated thermal motor protection
BC-ST: three-phase 380 V - 60 Hz or 440 V - 60 Hz
– Insulation: class F
– Protection rating: IP X8

10 Power cord

Power cable encapsulated with epoxy resin both in the grommet area and where the conductors exit the sheath, for absolute insulation against moisture and water.

Type 'H07 RN-F' (Schuko plug exclusive to single-phase models)

※ Standard length 10 metres

11 Float switch (exclusive to single-phase models)

12 Tilting device for the float cable
(exclusive to single-phase models)
Patent No. IT0001428923

13 Power cable strain relief
Patent No. EP2313658

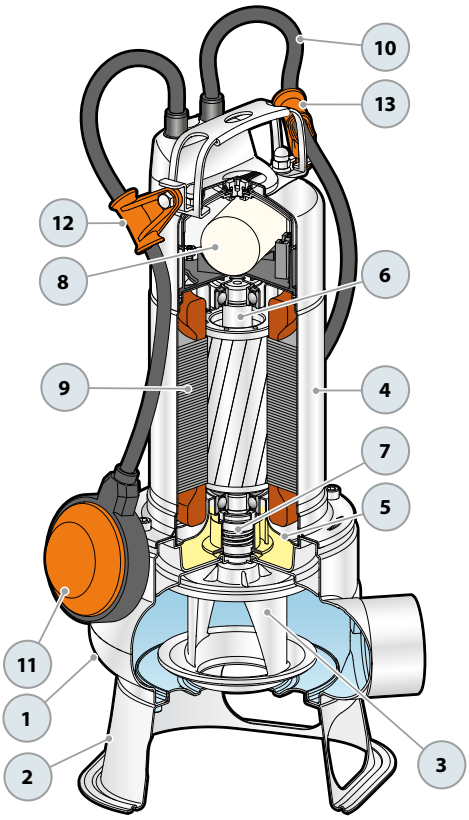

SEWAGE LIFTING SYSTEM KIT VX-ST - BC-ST

VERSION WITH HORIZONTAL DELIVERY AND ¾" GUIDE PIPES

For **VX /35-ST**	CODE ASSPVX35ST	DN **2"**
For **VX /50-ST , BC /50-ST**	CODE ASSPVX50ST	DN **2"**

※ Kit consisting of:

Coupling foot

Solids rail with ring nut and seal

Support for guide tubes

VERSION WITH VERTICAL DELIVERY AND ¾" GUIDE PIPES

For **VX /35-ST**	CODE ASSPVX35STV	DN **2½"**
For **VX /50-ST, BC /50-ST**	CODE ASSPVX50STV	DN **2½"**

※ Kit consisting of:

Coupling foot complete with counterflange

Solids rail with ring nut and seal

Support for guide tubes

● ACCESSORIES AVAILABLE FOR ORDER

RUNNING GUIDE

※ For **VX /35-ST**	CODE ASSFL005
※ For **VX /50-ST , BC /50-ST**	CODE ASSFL006

Complete with ring nut and gasket

GUIDE TUBE SUPPORT

※ For Ø ¾ **"** guide tubes	CODE 859SV340INTFA

To ensure stability, insert a support every 2 metres along the guide tube

GUIDE TUBE (AISI 304 stainless steel)

※ 2 metres Ø ¾" guide tube	CODE 54SARTG0052F
※ 3 metres Ø ¾" guide tube	CODE 54SARTG0053F
※ 6 metres Ø ¾" guide tube	CODE 54SARTG0056F

DIMENSIONS (Version with horizontal outlet)

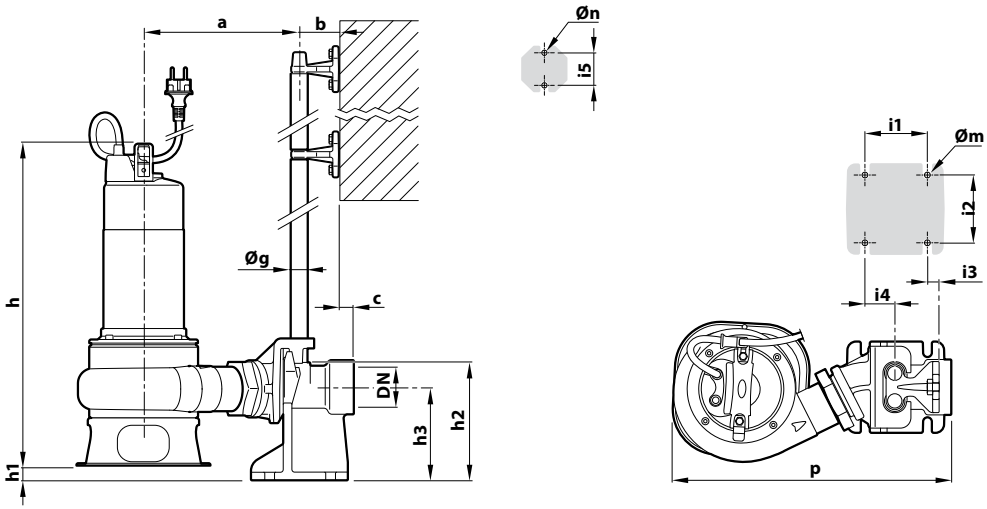

TYPE		Passage of solid bodies	PORT	DIMENSIONS mm															
Single-ph.	**Three-ph.**	mm	DN	a	b	c	p	h	h1	h2	h3	i1	i2	i3	i4	i5	Øg	Øm	Øn
VXm 8/35 -ST	**VX 8/35 -ST**	**40**	**2"**	214	61	17	386	424	24	165	130	85	94	16	40	50	¾"	12	11
VXm 10/35 -ST	**VX 10/35 -ST**							439											
VXm 15/35 -ST	**VX 15/35 -ST**							472											
VXm 20/35 -ST	**VX 20/35 -ST**							502											
VXm 8/50 -ST	**VX 8/50 -ST**	**50**	**2"**	221			372	435	23										
VXm 10/50 -ST	**VX 10/50 -ST**							450											
VXm 15/50 -ST	**VX 15/50 -ST**							483											
VXm 20/50 -ST	**VX 20/50 -ST**							513											
BCm 10/50 -ST	**BC 10/50 -ST**	**50**	**2"**					450											
BCm 15/50 -ST	**BC 15/50 -ST**							483											
BCm 20/50 -ST	**BC 20/50 -ST**							513											

DIMENSIONS (Version with vertical delivery)

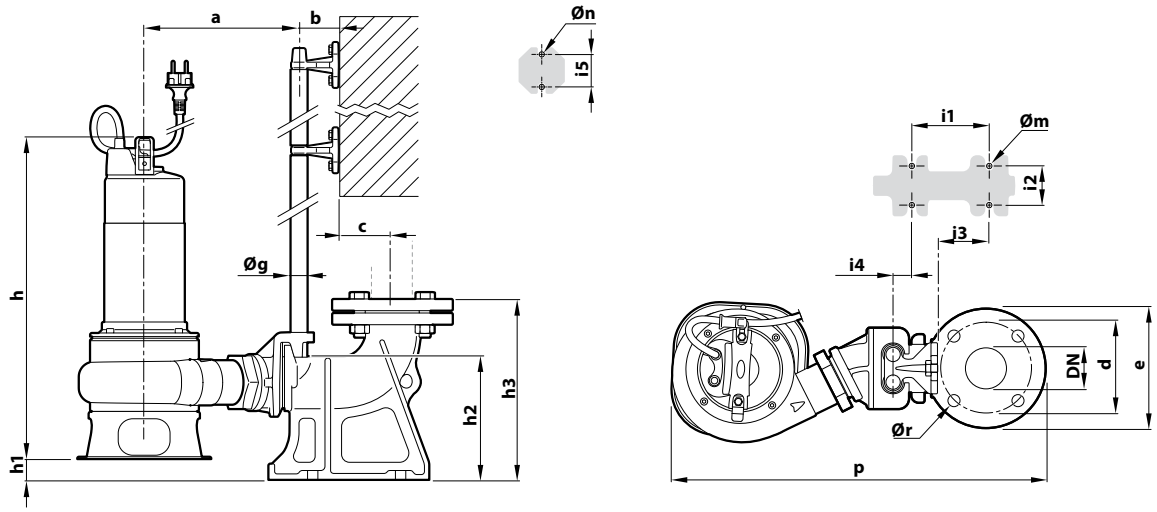

TYPE		Passage of solid bodies	PORT	DIMENSIONS mm																	
Single-ph.	**Three-ph.**	mm	DN	a	b	c	d	e	p	h	h1	h2	h3	i1	i2	i3	i4	i5	Øg	Øm	Øn	Ør
VXm 8/35 -ST	**VX 8/35 -ST**	**40**	**2½"**	207	61	52	125	165	495	424	22	164	215	120	72	62	3	50	¾"	14	11	18
VXm 10/35 -ST	**VX 10/35 -ST**									439												
VXm 15/35 -ST	**VX 15/35 -ST**									472												
VXm 20/35 -ST	**VX 20/35 -ST**									502												
VXm 8/50 -ST	**VX 8/50 -ST**	**50**	**2½"**	212					501	435	26											
VXm 10/50 -ST	**VX 10/50 -ST**									450												
VXm 15/50 -ST	**VX 15/50 -ST**									483												
VXm 20/50 -ST	**VX 20/50 -ST**									513												
BCm 10/50 -ST	**BC 10/50 -ST**	**50**	**2½"**							450												
BCm 15/50 -ST	**BC 15/50 -ST**									483												
BCm 20/50 -ST	**BC 20/50 -ST**									513												