NK Multi-stage submersible pumps

- Clean water
- Domestic use
- Civil use
- Agricultural use

※ Designed to transfer clean water in domestic, agricultural, and civil settings. Optimal for tanks or reservoirs water supply and garden irrigation

PERFORMANCE RANGE

- Flow rate up to **200 l/min** (12 m^3/h)
- Head up to **92 m**

INSTALLATION AND USE

Designed for enhanced reliability with patented solutions to prevent stalling during extended periods of inactivity. Superb for various applications including domestic, civil, and agricultural sectors, water distribution with pressure tanks, irrigation, and enhancing water pressure.

INCLUDES

※ Float switch (exclusive to single-phase models)
※ Power cable length **10 m**

APPLICATION LIMITS

- Liquid temperature up to **+40 °C**
- Maximum sand content **150 g/m^3**
- Maximum operating depth below water level up to **20 m** (with an appropriately sized power cable)

AVAILABLE UPON REQUEST

※ Other power cable lengths available
※ Different voltage or frequency

PATENTS - TRADE MARKS - MODELS

- Patent No. IT0001428923

Vertical Installation

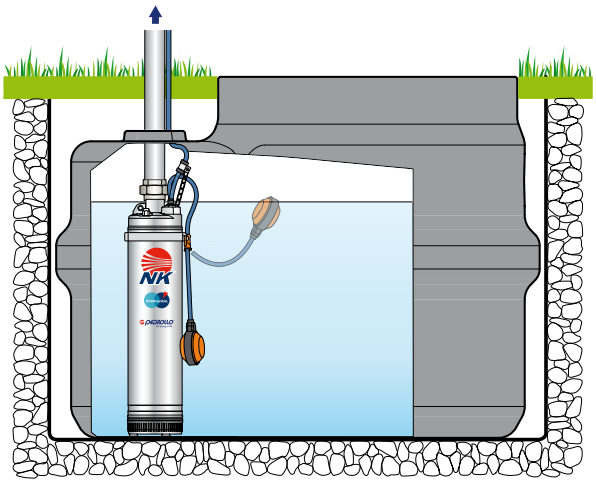

CURVES AND PERFORMANCE DATA

60 Hz

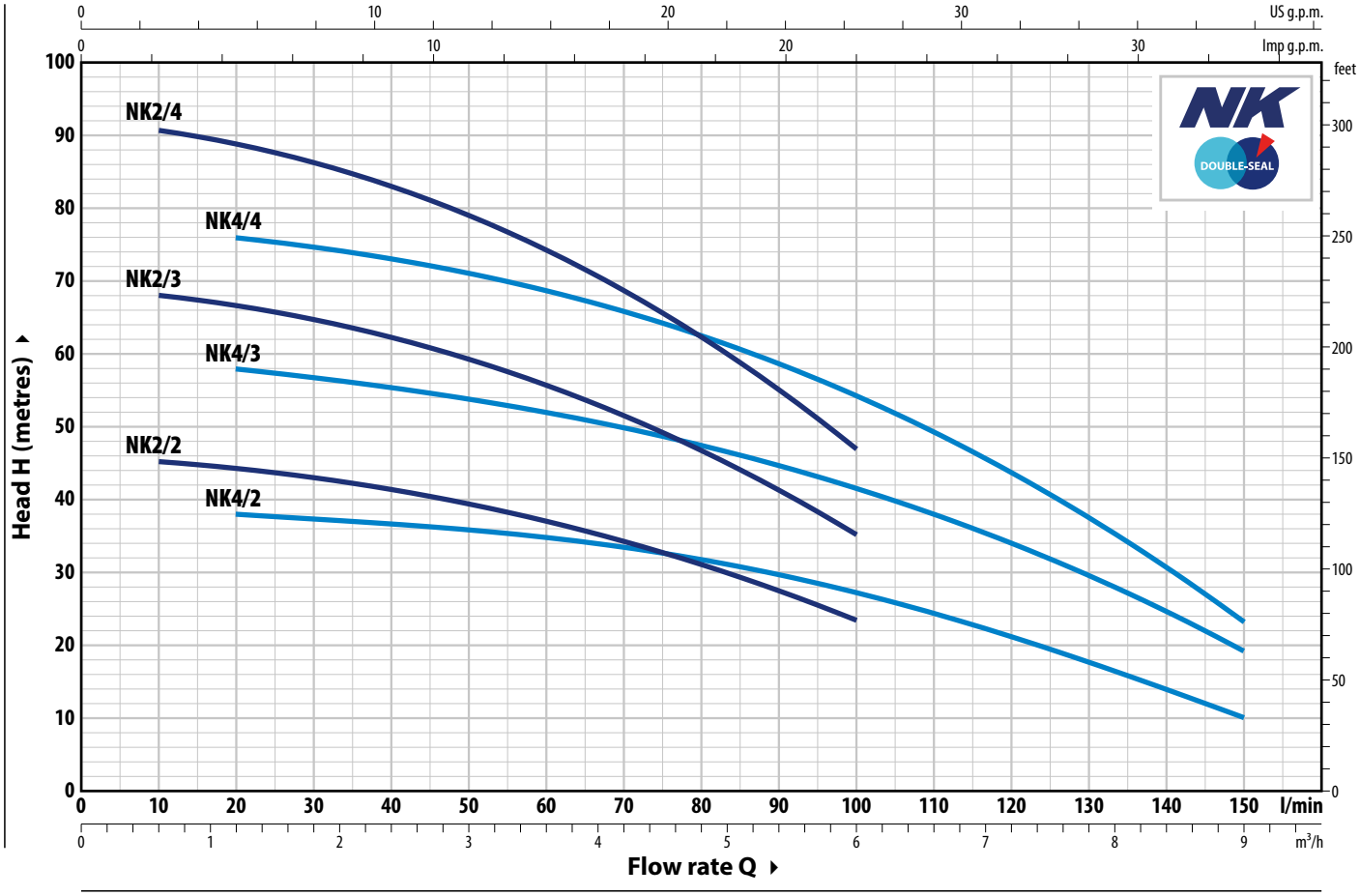

MODEL		POWER (P2)		Q m³/h	0	0.6	1.2	2.4	3.6	4.8	6.0	7.2	9.0
Single-phase	**Three-phase**	**kW**	**HP**	Q l/min	**0**	**10**	**20**	**40**	**60**	**80**	**100**	**120**	**150**
NKm 2/2 GE	**NK 2/2**	0.75	1		46	45.5	44.5	41.5	37	31	23.5		
NKm 2/3 GE	**NK 2/3**	1.1	1.5		69	68	66.5	62.5	55.5	47	35		
NKm 2/4 GE	**NK 2/4**	1.5	2		92	91	89	83	74	62.5	47		
NKm 4/2 GE	**NK 4/2**	0.75	1	**H** m	40	–	38	36.5	35	32	27	21	10
NKm 4/3 GE	**NK 4/3**	1.1	1.5		60	–	58	55.5	52	47.5	41.5	34	19
NKm 4/4 GE	**NK 4/4**	1.5	2		78	–	76	73	68.5	62.5	54	43.5	23

Q = Flow rate **H** = Total manometric head

Performance curves comply with EN ISO 9906 Grade 3B tolerance limits.

➠ **On request single-phase pumps without float switch**

NK

ABSORPTION

MODEL Single-phase	VOLTAGE 220 V
NKm 2/2 GE	5.8 A
NKm 2/3 GE	8.2 A
NKm 2/4 GE	10.0 A
NKm 4/2 GE	5.8 A
NKm 4/3 GE	7.7 A
NKm 4/4 GE	10.2 A

MODEL Three-phase	VOLTAGE 380 V
NK 2/2	2.2 A
NK 2/3	3.1 A
NK 2/4	3.5 A
NK 4/2	2.3 A
NK 4/3	3.1 A
NK 4/4	3.5 A

DIMENSIONS AND WEIGHT

MODEL		PORT	N. STAGES	DIMENSIONS mm		kg	
Single-phase	Three-phase	DN		Ø	h	1~	3~
NKm 2/2 GE	**NK 2/2**	1¼"	2	135	459	15.2	15.0
NKm 2/3 GE	**NK 2/3**		3		516	16.6	15.4
NKm 2/4 GE	**NK 2/4**		4		563	18.6	19.2
NKm 4/2 GE	**NK 4/2**		2		459	15.2	15.0
NKm 4/3 GE	**NK 4/3**		3		516	16.6	15.4
NKm 4/4 GE	**NK 4/4**		4		563	18.6	19.2

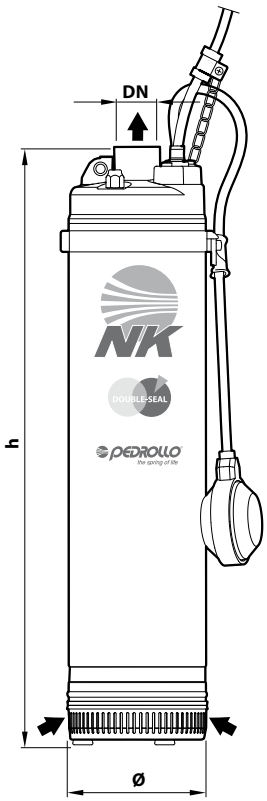

PALLET CAPACITY

MODEL		GROUPAGE	CONTAINER
Single-phase	Three-phase	n. pumps	n. pumps
NKm 2/2 GE	**NK 2/2**	30	54
NKm 2/3 GE	**NK 2/3**	30	54
NKm 2/4 GE	**NK 2/4**	25	45
NKm 4/2 GE	**NK 4/2**	30	54
NKm 4/3 GE	**NK 4/3**	30	54
NKm 4/4 GE	**NK 4/4**	25	45

MATERIALS AND COMPONENTS

1	**Outer sleeve**	**AISI 304** stainless steel, fitted with ISO 228/1 threaded delivery port
2	**Suction filter**	**AISI 304** stainless steel, complete with anti-vibration feet
3	**Motor sleeve**	Stainless steel **AISI 304**
4	**Impellers and diffusers**	Noryl™
5	**Diaphragms**	Stainless steel **AISI 304**
6	**Motor shaft**	Stainless steel **AISI 431**

7 Double mechanical seal with interposed oil chamber

Seal	Shaft	Location	Materials
STA-17	Ø 17 mm	Motor side	Ceramic / Graphite / NBR
ST1-16	Ø 16 mm	Pump side	Silicon carbide / Graphite / NBR

8 Capacitor

9 Electric motor

NKm: single-phase 220 V - 60 Hz with winding integrated thermal motor protection
NK: three-phase 380 V - 60 Hz

- Continuous running duty S1
- Insulation: Class F
- Protection rating IP X8

10 Power cord

➠ **DRINCABLE®** type
approved for use in drinking water by **WRAS**
according to BS 6920, approval no. 7513

※ Standard length 10 metres

11 Automatic vent valve

12 Anti-vibration feet
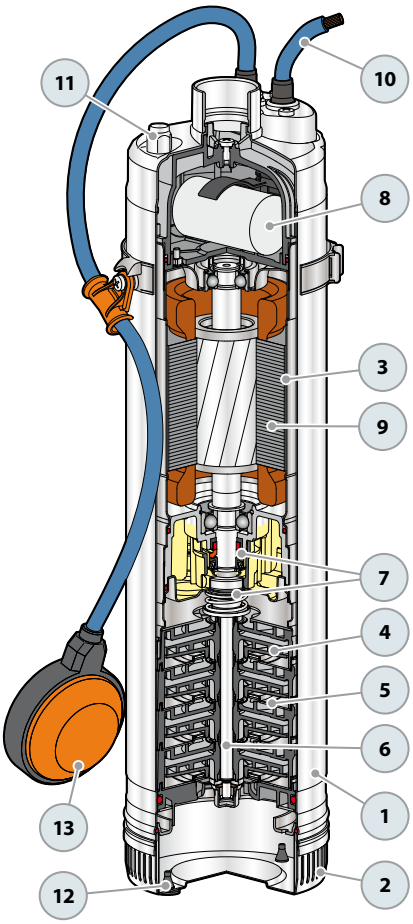
13 Float switch
(exclusive to single-phase models)